TG-77

(26W) ϕ63, 12-SLOT,
HIGH-POWER.

BM

TG-77A

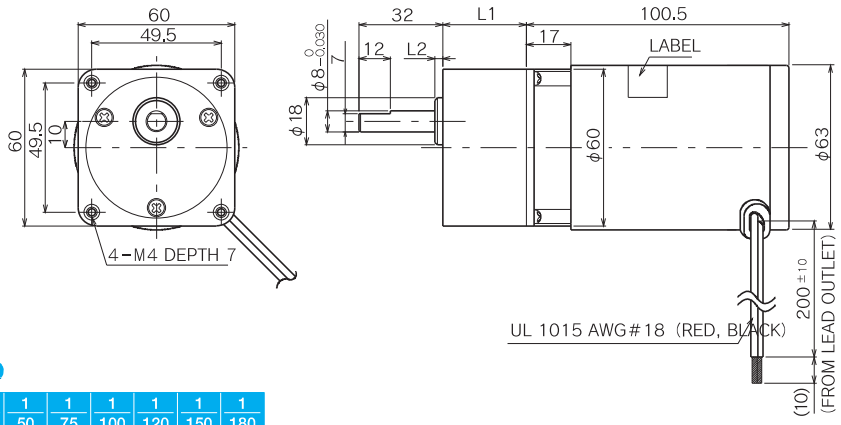

Allowable torque-speed characteristics BM

MODEL	GEAR RATIO	1/5	1/10	1/12.5	1/18	1/25	1/30	1/50	1/75	1/100	1/120	1/150	1/180
TG-77A-BM (24V)	SPEED (r/min)	501	250	200	139	100	83.8	52.4	35.9	27.4	23.1	18.6	16.7
	TORQUE (mN·m)	392	784	980	1274	1764	2058	2450	2450	2450	2450	2450	2450
	TORQUE (kgf·cm)	4	8	10	13	18	21	25	25	25	25	25	25

BM

GEAR RATIO	L1 (mm)	L2 (mm)	STAGE	TORQUE (mN·m)	TORQUE (kgf·cm)	WEIGHT (g)
1/3 ~ 1/15	32	3	2	1470	15	310
1/18 ~ 1/60	42	5	3	2450	25	400
1/75 ~ 1/180	42	5	4	2450	25	430

TG-78

(46W) ϕ71, 12-SLOT,
HIGH-POWER.

JM

TG-78A

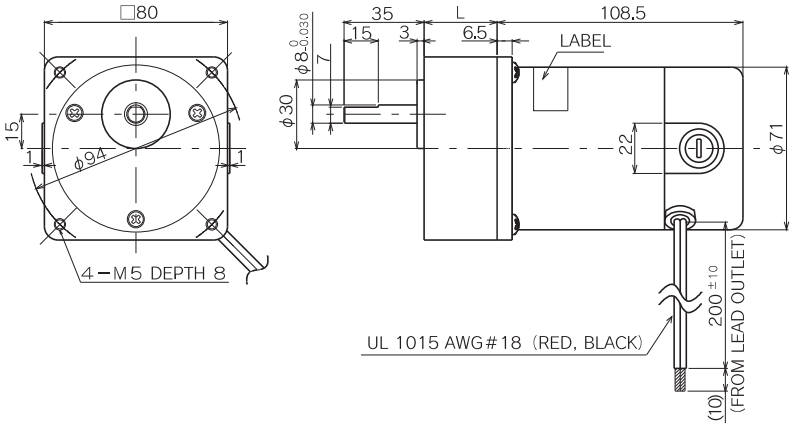

Allowable torque-speed characteristics JM

MODEL	GEAR RATIO	1/5	1/6	1/7.5	1/9	1/10	1/12.5	1/15	1/18	1/20	1/25	1/30	1/36	1/50	1/60	1/75	1/90	1/100	1/120	1/150	1/180
TG-78A-JM (24V)	SPEED (r/min)	609	521	427	362	304	236	203	174	150	124	106	87.6	62	52.8	42.8	36.2	32.9	27.7	22.5	18.9
	TORQUE (mN·m)	490	490	490	490	980	1470	1470	1470	1960	1960	1960	2450	3920	3920	3920	3920	3920	3920	3920	3920
	TORQUE (kgf·cm)	5	5	5	5	10	15	15	15	20	20	20	25	40	40	40	40	40	40	40	40

JM

GEAR RATIO	L (mm)	STAGE	TORQUE (mN·m)	TORQUE (kgf·cm)	WEIGHT (g)
1/5 ~ 1/9	32	2	490	5	500
1/10	32	2	980	10	500
1/12.5 ~ 1/18	32	2	1470	15	500
1/20 ~ 1/30	42.5	3	1960	20	650
1/36	42.5	3	2450	25	650
1/50 ~ 1/60	42.5	3	3920	40	650
1/75 ~ 1/180	42.5	4	3920	40	750