Linear motion unit (LA type)

TG-47-LA

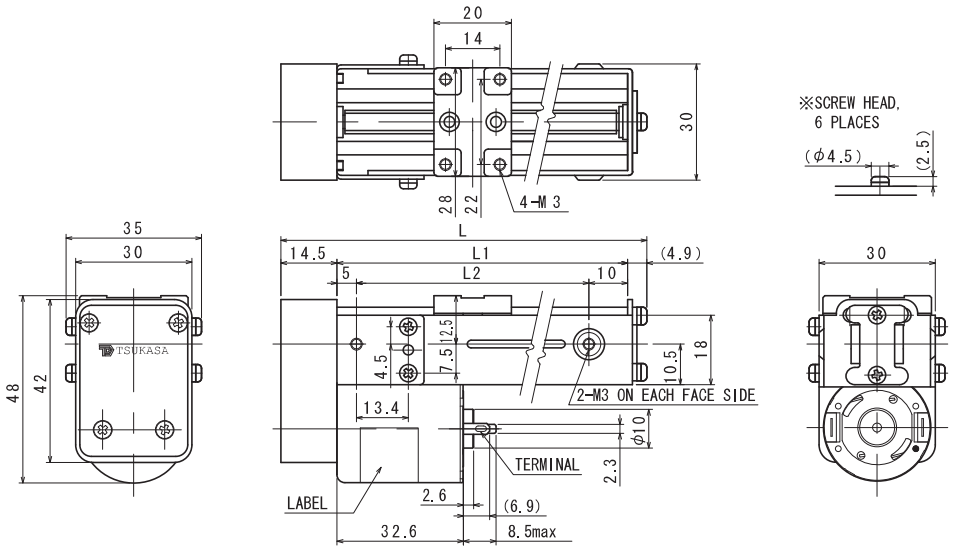

Specification

MOTOR MODEL	47E	47F	47G
WORKING LENGTH [mm]	MAX.50, 75, 100		
PULL FORCE [kgf]	1.0		
SPEED [mm/sec]	12.6	20.4	27.7
RATED CURRENT [mA] (DC24V)	MAX.130	MAX.180	MAX.210

Linear motion unit (LC type)

TG-47-LC

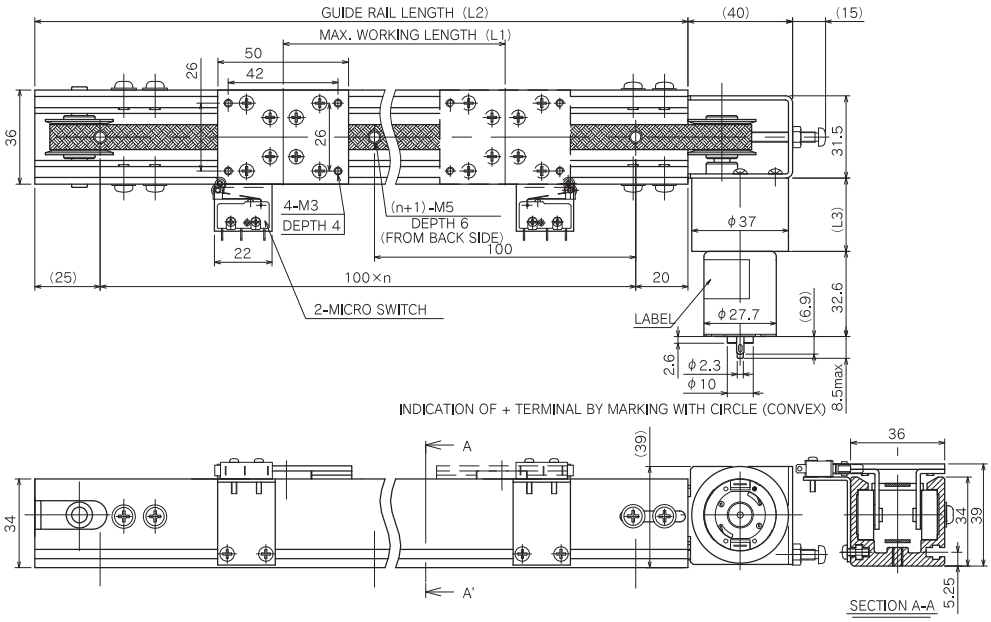

Specification

MOTOR MODEL	47E	47F	47G
WORKING LENGTH [mm]	300, 500, 700※		
PULL FORCE [N] [kgf]	9.8 ~ 39.2 (1.0 ~ 4.0)		
SPEED [mm/sec]	5 ~ 360		