AGD/AMD

TG-301A

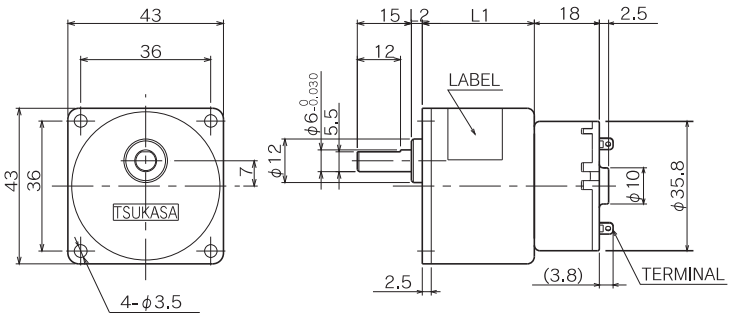

Allowable torque-speed characteristics AGD AMD

MODEL	GEAR RATIO	1/5	1/10	1/15	1/18	1/25	1/30	1/36	1/50	1/60	1/75	1/100	1/120	1/150	1/200	1/250	1/300	1/500	1/750	1/1000	1/1500
TG-301A-AGD (24V)	SPEED (r/min)	1157	609	390	332	237	195	164	117	97.8	77.9	57.8	48.2	38.7	29.5	23.6	19.3	11.6	8	6.1	4.2
	TORQUE (mN·m)	7.8	9.8	19.6	19.6	29.4	39.2	39.2	58.8	68.6	88.2	127.4	137.2	166.6	196	245	343	490	588	588	588
	TORQUE (kgf·cm)	0.08	0.1	0.2	0.2	0.3	0.4	0.4	0.6	0.7	0.9	1.3	1.4	1.7	2	2.5	3.5	5	6	6	6
TG-301A-AMD (24V)	SPEED (r/min)	1157	609	390	332	237	195	161	117	97.8	77.9	57.8	48.4	38.7	29.5	23.6	19.3	11.7	—	—	—
	TORQUE (mN·m)	7.8	9.8	19.6	19.6	29.4	39.2	49	58.8	68.6	88.2	127.4	147	186.2	196	245	343	539	—	—	—
	TORQUE (kgf·cm)	0.08	0.1	0.2	0.2	0.3	0.4	0.5	0.6	0.7	0.9	1.3	1.5	1.9	2	2.5	3.5	5.5	—	—	—

AGD

GEAR RATIO	L1 (mm)	L2 (mm)	STAGE	TORQUE (mN·m)	TORQUE (kgf·cm)	WEIGHT (g)
1/5 ~ 1/10	26	0.5	2	98	1	90
1/12.5 ~ 1/30	26	3	3	196	2	95
1/36 ~ 1/100	26	5.5	4	294	3	100
1/120 ~ 1/300	31	3	5	588	6	105
1/360 ~ 1/1000	31	5.5	6	588	6	110
1/1500 ~ 1/3000	31	8	7	588	6	115

AMD

GEAR RATIO	L1 (mm)	L2 (mm)	STAGE	TORQUE (mN·m)	TORQUE (kgf·cm)	WEIGHT (g)
1/5 ~ 1/10	26	4	2	98	1	110
1/12.5 ~ 1/18	26	6.5	3	343	3.5	115
1/25 ~ 1/36	26	6.5	3	392	4	115
1/50 ~ 1/75	31	4	4	490	5	115
1/90 ~ 1/150	31	4	4	686	7	115
1/180 ~ 1/500	31	6.5	5	686	7	120

TG-05

(1.2 ~ 3.5W) φ35.8, COMPACT AND LONG LIFE, LOW NOISE, ENCODER CAN BE MOUNTED.

APPLICATION LASER PRINTER / COPY MACHINE / FINISHER / STAMPER / TICKETING DEVICE / STACKER / MONEY COUNTING MACHINE / BILL BINDING MACHINE / COIN HOPPER / VENDING MACHINE / BUS FARE BOX / ATM / GAMING MACHINE / SECURITY CAMERA / X-RAY MACHINE / SEWING MACHINE / VALVE / PRINTING PRESS etc.

SS

TG-05J
TG-05K
TG-05L
TG-05R

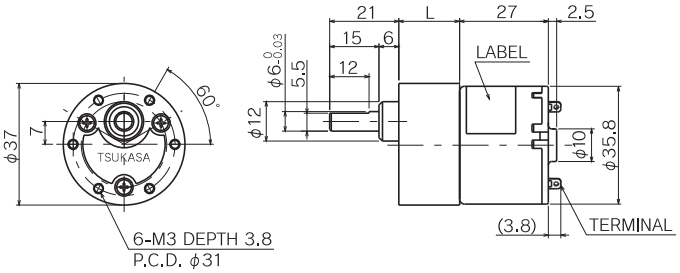

Allowable torque-speed characteristics SS

MODEL	GEAR RATIO	1/115	1/149	1/191	1/248	1/286	1/371	1/477	1/619
TG-05J-SS (24V)	SPEED (r/min)	35.7	28	22.6	18	15.8	12.4	9.8	7.6
	TORQUE (mN·m)	245	294	294	294	294	294	294	294
	TORQUE (kgf·cm)	2.5	3	3	3	3	3	3	3
TG-05K-SS (24V)	SPEED (r/min)	51.9	40.6	32.6	25.9	22.6	17.7	14	10.9
	TORQUE (mN·m)	245	294	294	294	294	294	294	294
	TORQUE (kgf·cm)	2.5	3	3	3	3	3	3	3
TG-05L-SS (24V)	SPEED (r/min)	71.7	57.5	45.9	36.2	31.6	24.7	19.4	15.1
	TORQUE (mN·m)	294	294	294	294	294	294	294	294
	TORQUE (kgf·cm)	3	3	3	3	3	3	3	3
TG-05L-SS (12V)	SPEED (r/min)	34.7	27.5	20.8	16.8	14.8	11.8	9.4	7.3
	TORQUE (mN·m)	176.4	196	294	294	294	294	294	294
	TORQUE (kgf·cm)	1.8	2	3	3	3	3	3	3
TG-05R-SS (12V)	SPEED (r/min)	50.1	37.9	30.5	24.1	21.1	16.5	13.0	10.1
	TORQUE (mN·m)	196	294	294	294	294	294	294	294
	TORQUE (kgf·cm)	3	3	3	3	3	3	3	3

SS

GEAR RATIO	L (mm)	STAGE	TORQUE (mN·m)	TORQUE (kgf·cm)	WEIGHT (g)
1/115 ~ 1/248	20.5	6	294	3	129
1/286 ~ 1/619	22.8	7	294	3	131

SG/SM

TG-05D
TG-05J
TG-05K
TG-05L
TG-05R

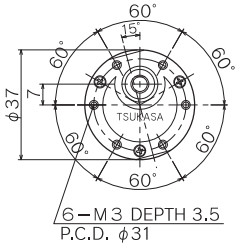

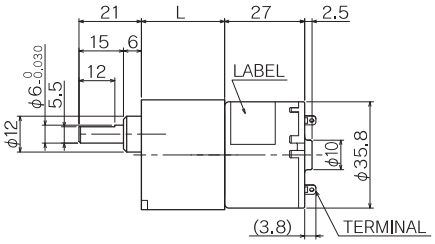

Allowable torque-speed characteristics SG SM

MODEL	GEAR RATIO	1/5	1/10	1/15	1/18	1/25	1/30	1/36	1/50	1/60	1/75	1/100	1/120	1/150	1/200	1/250	1/300	1/500	1/750	1/1000	1/1500
TG-05D-SG (6V)	SPEED (r/min)	1135	533	356	294	212	178	147	105	88.3	70.4	53	44.8	35.1	26.5	21.3	18.1	11.5	7.9	6.1	4.1
	TORQUE (mN·m)	9.8	29.4	39.2	49	68.6	78.4	88.2	127.4	147	186.2	245	245	343	441	539	588	588	588	588	588
	TORQUE (kgf·cm)	0.1	0.3	0.4	0.5	0.7	0.8	0.9	1.3	1.5	1.9	2.5	2.5	3.5	4.5	5.5	6	6	6	6	6
TG-05J-SG (24V)	SPEED (r/min)	883	417	279	231	162	136	113	81.3	67.6	54.7	41.5	33.9	27.5	20.4	16.4	14.1	8.9	6.1	4.7	3.2
	TORQUE (mN·m)	9.8	29.4	39.2	49	78.4	88.2	98	137.2	166.6	196	245	294	343	490	588	588	588	588	588	588
	TORQUE (kgf·cm)	0.1	0.3	0.4	0.5	0.8	0.9	1	1.4	1.7	2	2.5	3	3.5	5	6	6	6	6	6	6
TG-05K-SG (24V)	SPEED (r/min)	1271	605	404	335	235	198	164	118	98.3	79.5	60.2	49.3	39.9	29.6	23.9	20.4	12.8	8.8	6.7	4.5
	TORQUE (mN·m)	9.8	29.4	39.2	49	78.4	88.2	98	137.2	166.6	196	245	294	343	490	588	588	588	588	588	588
	TORQUE (kgf·cm)	0.1	0.3	0.4	0.5	0.8	0.9	1	1.4	1.7	2	2.5	3	3.5	5	6	6	6	6	6	6
TG-05L-SG (24V)	SPEED (r/min)	1643	821	554	462	329	277	230	165	137	113	83.2	68.4	55.6	41.5	33.8	28.8	17.9	12.2	9.3	6.2
	TORQUE (mN·m)	19.6	39.2	49	58.8	88.2	98	107.8	156.8	186.2	196	294	343	392	539	588	588	588	588	588	588
	TORQUE (kgf·cm)	0.2	0.4	0.5	0.6	0.9	1	1.1	1.6	1.9	2	3	3.5	4	5.5	6	6	6	6	6	6
TG-05L-SG (12V)	SPEED (r/min)	822	411	269	231	161	134	110	80.6	66.9	53.4	39.9	33.4	26.7	19.9	16.2	13.4	8.3	5.8	4.5	3
	TORQUE (mN·m)	9.8	19.6	29.4	29.4	49	58.8	68.6	88.2	107.8	137.2	186.2	196	245	343	392	490	588	588	588	588
	TORQUE (kgf·cm)	0.1	0.2	0.3	0.3	0.5	0.6	0.7	0.9	1.1	1.4	1.9	2	2.5	3.5	4	5	6	6	6	6
TG-05R-SG (12V)	SPEED (r/min)	1185	565	377	313	225	189	156	112	93.8	74.9	56.3	47.4	37.3	28.1	22.6	19.1	11.9	8.2	6.2	4.2
	TORQUE (mN·m)	9.8	29.4	39.2	49	68.6	78.4	88.2	127.4	147	186.2	245	245	343	441	539	588	588	588	588	588
	TORQUE (kgf·cm)	0.1	0.3	0.4	0.5	0.7	0.8	0.9	1.3	1.5	1.9	2.5	2.5	3.5	4.5	5.5	6	6	6	6	6
TG-05D-SM (6V)	SPEED (r/min)	1135	533	356	294	212	178	147	105	88.3	70.4	53	44.8	35.1	26.5	21.3	18.1	11.5	7.9	6.1	—
	TORQUE (mN·m)	9.8	29.4	39.2	49	68.6	78.4	88.2	127.4	147	186.2	245	245	343	441	539	588	588	588	588	—
	TORQUE (kgf·cm)	0.1	0.3	0.4	0.5	0.7	0.8	0.9	1.3	1.5	1.9	2.5	2.5	3.5	4.5	5.5	6	6	6	6	—
TG-05J-SM (24V)	SPEED (r/min)	883	417	279	231	162	136	113	81.3	67.6	54.7	41.5	33.9	27.5	20.4	16.4	14.1	8.9	6.1	4.7	—
	TORQUE (mN·m)	9.8	29.4	39.2	49	78.4	88.2	98	137.2	166.6	196	245	294	343	490	588	588	588	588	588	—
	TORQUE (kgf·cm)	0.1	0.3	0.4	0.5	0.8	0.9	1	1.4	1.7	2	2.5	3	3.5	5	6	6	6	6	6	—
TG-05K-SM (24V)	SPEED (r/min)	1271	605	404	335	235	198	164	118	98.3	79.5	60.2	49.3	39.9	29.6	23.9	20.4	12.8	8.8	6.7	—
	TORQUE (mN·m)	9.8	29.4	39.2	49	78.4	88.2	98	137.2	166.6	196	245	294	343	490	588	588	588	588	588	—
	TORQUE (kgf·cm)	0.1	0.3	0.4	0.5	0.8	0.9	1	1.4	1.7	2	2.5	3	3.5	5	6	6	6	6	6	—
TG-05L-SM (24V)	SPEED (r/min)	1643	821	554	462	329	277	230	165	137	113	83.2	68.4	55.6	41.5	33.8	28.8	17.9	12.2	9.3	—
	TORQUE (mN·m)	19.6	39.2	49	58.8	88.2	98	107.8	156.8	186.2	196	294	343	392	539	588	588	588	588	588	—
	TORQUE (kgf·cm)	0.2	0.4	0.5	0.6	0.9	1	1.1	1.6	1.9	2	3	3.5	4	5.5	6	6	6	6	6	—
TG-05L-SM (12V)	SPEED (r/min)	822	411	269	231	161	134	110	80.6	66.9	53.4	39.9	33.4	26.7	19.9	16.2	13.4	8.3	5.8	4.5	—
	TORQUE (mN·m)	9.8	19.6	29.4	29.4	49	58.8	68.6	88.2	107.8	137.2	186.2	196	245	343	392	490	588	588	588	—
	TORQUE (kgf·cm)	0.1	0.2	0.3	0.3	0.5	0.6	0.7	0.9	1.1	1.4	1.9	2	2.5	3.5	4	5	6	6	6	—
TG-05R-SM (12V)	SPEED (r/min)	1185	565	377	313	225	189	156	112	93.8	74.9	56.3	47.4	37.3	28.1	22.6	19.1	11.9	8.2	6.2	—
	TORQUE (mN·m)	9.8	29.4	39.2	49	68.6	78.4	88.2	127.4	147	186.2	245	245	343	441	539	588	588	588	588	—
	TORQUE (kgf·cm)	0.1	0.3	0.4	0.5	0.7	0.8	0.9	1.3	1.5	1.9	2.5	2.5	3.5	4.5	5.5	6	6	6	6	—

SG

GEAR RATIO	L (mm)	STAGE	TORQUE (mN·m)	TORQUE (kgf·cm)	WEIGHT (g)
1/5 ~ 1/10	20.5	2	98	1	100
1/12.5 ~ 1/30	23	3	196	2	105
1/36 ~ 1/100	25.5	4	294	3	110
1/120 ~ 1/300	28	5	588	6	115
1/360 ~ 1/1000	30.5	6	588	6	120
1/1500 ~ 1/3000	33	7	588	6	125

SM

GEAR RATIO	L (mm)	STAGE	TORQUE (mN·m)	TORQUE (kgf·cm)	WEIGHT (g)
1/5 ~ 1/10	23	2	98	1	100
1/12.5 ~ 1/30	25.5	3	196	2	105
1/36 ~ 1/100	28	4	294	3	110
1/120 ~ 1/300	30.5	5	588	6	115
1/360 ~ 1/1000	33	6	588	6	120

TSUKASA ELECTRIC CO.,Ltd CHUO 5-40-17, NAKANO-KU 164-0011, TOKYO, JAPAN PHONE : 81-3-5340-0331 FAX : 81-3-5340-0330

AGD/AMD

TG-05D
TG-05J
TG-05K
TG-05L
TG-05R

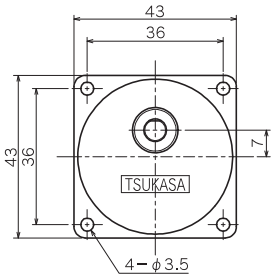

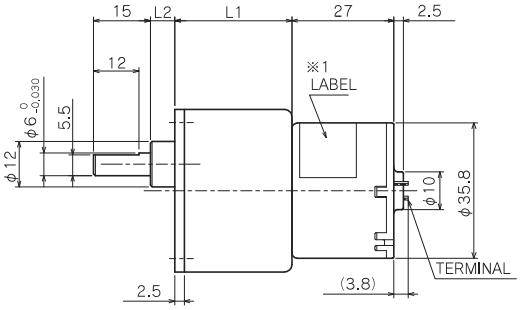

Allowable torque-speed characteristics AGD AMD

MODEL	GEAR RATIO	1/5	1/10	1/15	1/18	1/25	1/30	1/36	1/50	1/60	1/75	1/100	1/120	1/150	1/200	1/250	1/300	1/500	1/750	1/1000	1/1500
TG-05D-AGD (6V)	SPEED (r/min)	1135	533	356	294	212	178	147	105	88.3	70.4	53	44.8	35.1	26.5	21.3	18.1	11.5	7.9	6.1	4.1
	TORQUE (mN·m)	9.8	29.4	39.2	49	68.6	78.4	88.2	127.4	147	186.2	245	245	343	441	539	588	588	588	588	588
	TORQUE (kgf·cm)	0.1	0.3	0.4	0.5	0.7	0.8	0.9	1.3	1.5	1.9	2.5	2.5	3.5	4.5	5.5	6	6	6	6	6
TG-05J-AGD (24V)	SPEED (r/min)	883	417	279	231	162	136	113	81.3	67.6	54.7	41.5	33.9	27.5	20.4	16.4	14.1	8.9	6.1	4.7	3.2
	TORQUE (mN·m)	9.8	29.4	39.2	49	78.4	88.2	98	137.2	166.6	196	245	294	343	490	588	588	588	588	588	588
	TORQUE (kgf·cm)	0.1	0.3	0.4	0.5	0.8	0.9	1	1.4	1.7	2	2.5	3	3.5	5	6	6	6	6	6	6
TG-05K-AGD (24V)	SPEED (r/min)	1271	605	404	335	235	198	164	118	98.3	79.5	60.2	49.3	39.9	29.6	23.9	20.4	12.8	8.8	6.7	4.5
	TORQUE (mN·m)	9.8	29.4	39.2	49	78.4	88.2	98	137.2	166.6	196	245	294	343	490	588	588	588	588	588	588
	TORQUE (kgf·cm)	0.1	0.3	0.4	0.5	0.8	0.9	1	1.4	1.7	2	2.5	3	3.5	5	6	6	6	6	6	6
TG-05L-AGD (24V)	SPEED (r/min)	1643	821	554	462	329	277	230	165	137	113	83.2	68.4	55.6	41.5	33.8	28.8	17.9	12.2	9.3	6.2
	TORQUE (mN·m)	19.6	39.2	49	58.8	88.2	98	107.8	156.8	186.2	196	294	343	392	539	588	588	588	588	588	588
	TORQUE (kgf·cm)	0.2	0.4	0.5	0.6	0.9	1	1.1	1.6	1.9	2	3	3.5	4	5.5	6	6	6	6	6	6
TG-05L-AGD (12V)	SPEED (r/min)	822	411	269	231	161	134	110	80.6	66.9	53.4	39.9	33.4	26.7	19.9	16.2	13.4	8.3	5.8	4.5	3
	TORQUE (mN·m)	9.8	19.6	29.4	29.4	49	58.8	68.6	88.2	107.8	137.2	186.2	196	245	343	392	490	588	588	588	588
	TORQUE (kgf·cm)	0.1	0.2	0.3	0.3	0.5	0.6	0.7	0.9	1.1	1.4	1.9	2	2.5	3.5	4	5	6	6	6	6
TG-05R-AGD (12V)	SPEED (r/min)	1185	565	377	313	225	189	156	112	93.8	74.9	56.3	47.4	37.3	28.1	22.6	19.1	11.9	8.2	6.2	4.2
	TORQUE (mN·m)	9.8	29.4	39.2	49	68.6	78.4	88.2	127.4	147	186.2	245	245	343	441	539	588	588	588	588	588
	TORQUE (kgf·cm)	0.1	0.3	0.4	0.5	0.7	0.8	0.9	1.3	1.5	1.9	2.5	2.5	3.5	4.5	5.5	6	6	6	6	6
TG-05D-AMD (6V)	SPEED (r/min)	1135	533	356	294	212	178	147	105	88.3	70.4	53	44.1	35.8	26.5	21.3	17.5	11.4	—	—	—
	TORQUE (mN·m)	9.8	29.4	39.2	49	68.6	78.4	98	127.4	147	186.2	245	294	343	441	539	686	686	—	—	—
	TORQUE (kgf·cm)	0.1	0.3	0.4	0.5	0.7	0.8	1	1.3	1.5	1.9	2.5	3	3.5	4.5	5.5	7	7	—	—	—
TG-05J-AMD (24V)	SPEED (r/min)	883	417	279	231	162	136	113	81.3	67.6	54.7	41.5	33.6	27.4	20.4	16.2	13.8	8.9	—	—	—
	TORQUE (mN·m)	9.8	29.4	39.2	49	78.4	88.2	107.8	137.2	166.6	196	245	343	392	490	637	686	686	—	—	—
	TORQUE (kgf·cm)	0.1	0.3	0.4	0.5	0.8	0.9	1.1	1.4	1.7	2	2.5	3.5	4	5	6.5	7	7	—	—	—
TG-05K-AMD (24V)	SPEED (r/min)	1271	605	404	335	235	198	165	118	98.3	79.5	60.2	48.9	39.7	29.6	23.5	20	12.8	—	—	—
	TORQUE (mN·m)	9.8	29.4	39.2	49	78.4	88.2	137.2	137.2	166.6	196	245	343	392	490	637	686	686	—	—	—
	TORQUE (kgf·cm)	0.1	0.3	0.4	0.5	0.8	0.9	1.1	1.4	1.7	2	2.5	3.5	4	5	6.5	7	7	—	—	—
TG-05L-AMD (24V)	SPEED (r/min)	1643	821	554	462	329	277	228	165	137	113	83.2	69.6	55.4	41.5	33.1	28.3	17.9	—	—	—
	TORQUE (mN·m)	19.6	39.2	49	58.8	88.2	98	127.4	156.8	186.2	196	294	343	441	539	686	686	686	—	—	—
	TORQUE (kgf·cm)	0.2	0.4	0.5	0.6	0.9	1	1.3	1.6	1.9	2	3	3.5	4.5	5.5	7	7	7	—	—	—
TG-05L-AMD (12V)	SPEED (r/min)	822	411	269	231	161	134	113	80.6	66.9	53.4	39.9	34.1	27.3	19.9	16.2	13.4	8.3	—	—	—
	TORQUE (mN·m)	9.8	19.6	29.4	29.4	49	58.8	68.6	88.2	107.8	137.2	186.2	196	245	343	392	490	686	—	—	—
	TORQUE (kgf·cm)	0.1	0.2	0.3	0.3	0.5	0.6	0.7	0.9	1.1	1.4	1.9	2	2.5	3.5	4	5	7	—	—	—
TG-05R-AMD (12V)	SPEED (r/min)	1185	565	377	313	225	189	156	112	93.8	74.9	56.3	46.9	37.9	28.1	22.6	18.7	11.9	—	—	—
	TORQUE (mN·m)	9.8	29.4	39.2	49	68.6	78.4	98	127.4	147	186.2	245	294	343	441	539	686	686	—	—	—
	TORQUE (kgf·cm)	0.1	0.3	0.4	0.5	0.7	0.8	1	1.3	1.5	1.9	2.5	3	3.5	4.5	5.5	7	7	—	—	—

AGD

GEAR RATIO	L1 (mm)	L2 (mm)	STAGE	TORQUE (mN·m)	TORQUE (kgf·cm)	WEIGHT (g)
1/5 ~ 1/10	26	0.5	2	98	1	90
1/12.5 ~ 1/30	26	3	3	196	2	95
1/36 ~ 1/100	26	5.5	4	294	3	100
1/120 ~ 1/300	31	3	5	588	6	105
1/360 ~ 1/1000	31	5.5	6	588	6	110
1/1500 ~ 1/3000	31	8	7	588	6	115

AMD

GEAR RATIO	L1 (mm)	L2 (mm)	STAGE	TORQUE (mN·m)	TORQUE (kgf·cm)	WEIGHT (g)
1/5 ~ 1/10	26	4	2	98	1	110
1/12.5 ~ 1/18	26	6.5	3	343	3.5	115
1/25 ~ 1/36	26	6.5	3	392	4	115
1/50 ~ 1/75	31	4	4	490	5	115
1/90 ~ 1/150	31	4	4	686	7	115
1/180 ~ 1/500	31	6.5	5	686	7	120

SU

TG-05D
TG-05J
TG-05K
TG-05L
TG-05R

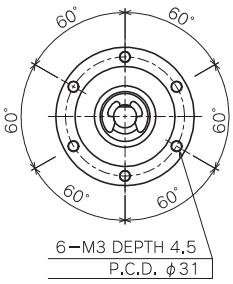

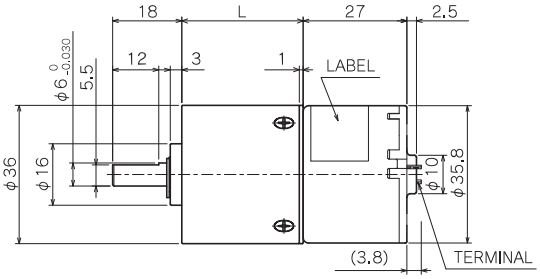

Allowable torque-speed characteristics SU

MODEL	GEAR RATIO	1/3.6	1/4.8	1/13.2	1/17.6	1/23.5	1/47.9	1/63.9	1/85.3	1/114	1/174	1/232	1/310	1/413	1/552
TG-05D-SU (6V)	SPEED (r/min)	1413	1100	379	279	209	102	76.4	58.1	43.1	28	21.1	15.7	12.2	9.5
	TORQUE (mN·m)	9.8	9.8	39.2	58.8	78.4	137.2	196	245	343	441	637	882	980	980
	TORQUE (kgf·cm)	0.1	0.1	0.4	0.6	0.8	1.4	2	2.5	3.5	4.5	6.5	9	10	10
TG-05J-SU (24V)	SPEED (r/min)	1110	774	286	213	161	78.3	60.2	44.1	33	21.6	16.1	12.1	9.6	7.5
	TORQUE (mN·m)	9.8	19.6	49	68.6	88.2	156.8	196	294	392	490	735	980	980	980
	TORQUE (kgf·cm)	0.1	0.2	0.5	0.7	0.9	1.6	2	3	4	5	7.5	10	10	10
TG-05K-SU (24V)	SPEED (r/min)	1581	1113	410	306	231	113	86.2	63.4	47.5	31.1	23.2	17.4	13.7	10.6
	TORQUE (mN·m)	9.8	19.6	49	68.6	88.2	156.8	196	294	392	490	735	980	980	980
	TORQUE (kgf·cm)	0.1	0.2	0.5	0.7	0.9	1.6	2	3	4	5	7.5	10	10	10
TG-05L-SU (24V)	SPEED (r/min)	2255	1607	592	442	327	159	120	91.4	67.2	44.1	33.1	25.1	19.6	15.1
	TORQUE (mN·m)	9.8	19.6	49	68.6	98	176.4	245	294	441	539	784	980	980	980
	TORQUE (kgf·cm)	0.1	0.2	0.5	0.7	1	1.8	2.5	3	4.5	5.5	8	10	10	10
TG-05L-SU (12V)	SPEED (r/min)	957	762	272	204	149	73.8	54.5	41	31.2	20.5	15	11.3	8.4	6.5
	TORQUE (mN·m)	9.8	9.8	29.4	39.2	58.8	98	147	196	245	294	490	637	882	980
	TORQUE (kgf·cm)	0.1	0.1	0.3	0.4	0.6	1	1.5	2	2.5	3	5	6.5	9	10
TG-05R-SU (12V)	SPEED (r/min)	1521	1173	411	304	228	111	83.3	63.1	47	30.6	23	17.1	13.2	10.2
	TORQUE (mN·m)	9.8	9.8	39.2	58.8	78.4	137.2	196	245	343	441	637	882	980	980
	TORQUE (kgf·cm)	0.1	0.1	0.4	0.6	0.8	1.4	2	2.5	3.5	4.5	6.5	9	10	10

SU

GEAR RATIO	L (mm)	STAGE	TORQUE (mN·m)	TORQUE (kgf·cm)	WEIGHT (g)
1/3.6 ~ 1/4.8	23.5	1	294	3	120
1/13.2 ~ 1/23.5	31.6	2	558	6	160
1/47.9 ~ 1/114	38.6	3	980	10	195
1/174 ~ 1/552	45.7	4	980	10	235

TSUKASA ELECTRIC CO.,Ltd CHUO 5-40-17, NAKANO-KU 164-0011, TOKYO, JAPAN PHONE : 81-3-5340-0331 FAX : 81-3-5340-0330